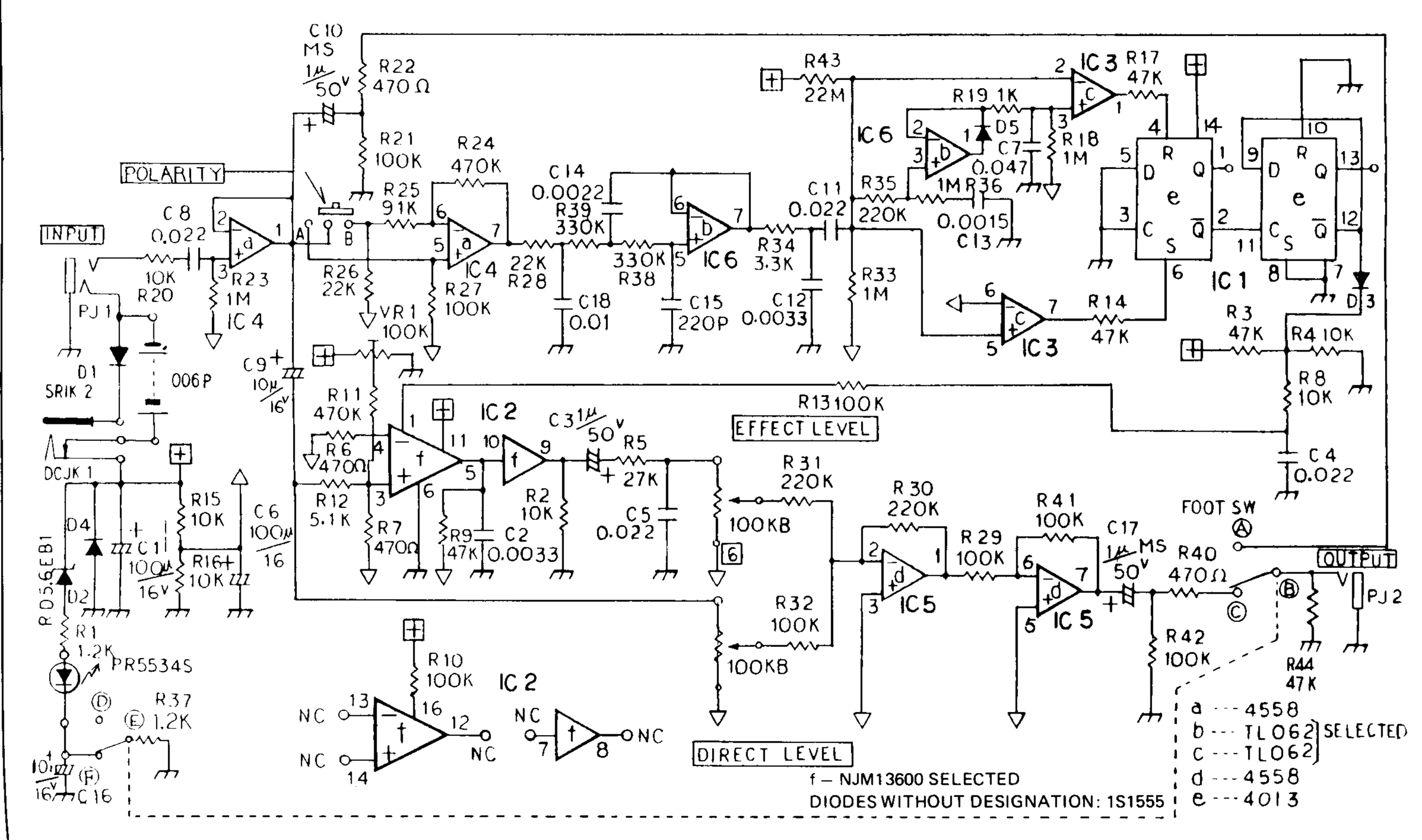
C10 MS 1μ/50V
R22 470Ω
R21 100K
R24 470K
R25 91K
POLARITY
INPUT
C8 0.022
10K R20
R23 1M
IC4
PJ1
D1 SRIK 2
006P
DCJK 1
R26 22K
VR1 100K
R27 100K
C9 10μ/16V
R11 470K
R6 470Ω
R12 5.1K
R7 470Ω
R9 47K
C2 0.0033
IC2
C3 1μ/50V
R5 27K
R2 10K
C5 0.022
R13 100K
EFFECT LEVEL
100KB
R31 220K
R32 100K
DIRECT LEVEL
R15 10K
R16 10K
C6 100μ/16
C1 100μ/16V
D4
D2
RD5.6EB1
R1 1.2K
PR5534S
R37 1.2K
C16 10μ/16V
R10 100K
NC
R43 22M
C14 0.0022
R39 330K
22K R28
C18 0.01
330K R38
C15 220P
IC6
R34 3.3K
C11 0.022
C12 0.0033
R33 1M
R35 220K
R36 1M
C13 0.0015
R19 1K
D5
C7 0.047
R18 1M
IC3
R17 47K
R14 47K
IC1
R3 47K
R4 10K
R8 10K
C4 0.022
D3
R30 220K
IC5
R29 100K
R41 100K
C17 1μ MS 50V
R40 470Ω
R42 100K
FOOT SW
OUTPUT
PJ2
R44 47K
a --- 4558
b --- TL062
c --- TL062
SELECTED
d --- 4558
e --- 4013
f — NJM13600 SELECTED
DIODES WITHOUT DESIGNATION: 1S1555